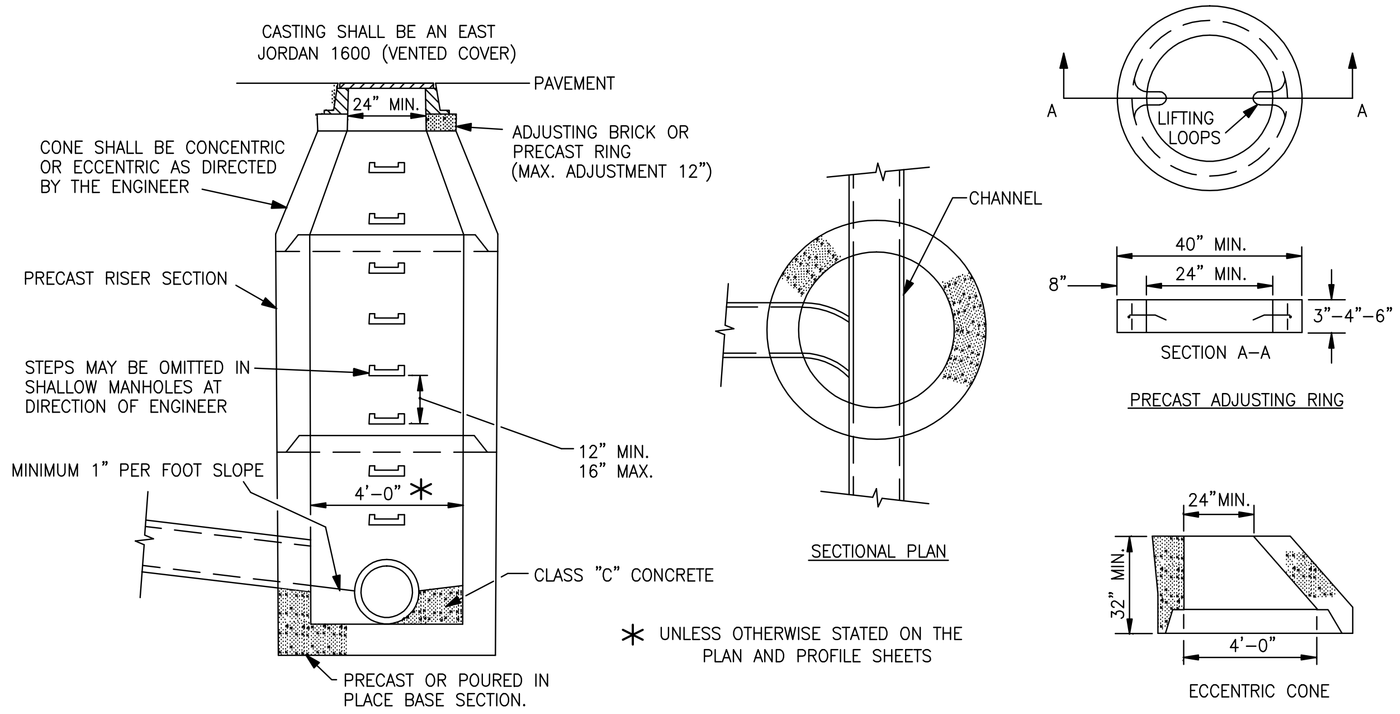

TYPE 'A' STORM MANHOLE (ASTM C-478)

NO SCALE

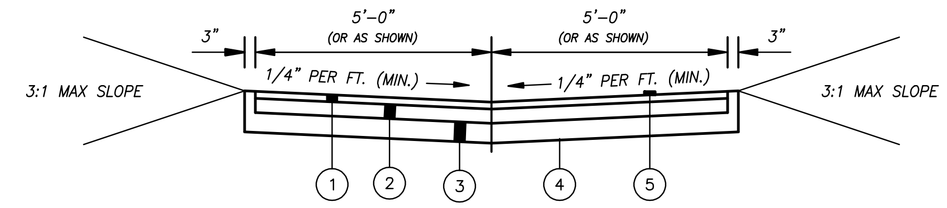

1. ITEM 448 – 2" ASPHALT CONCRETE SURFACE COURSE, TYPE 1, PG64-22
2. ITEM 301 – 4" ASPHALT CONCRETE BASE
3. ITEM 304 – 6" COMPACTED AGGREGATE BASE
4. ITEM 204 – SUBGRADE COMPACTION
5. ITEM 32 12 34 – ASPHALT REJUVENATING AGENT (RECLAMITE) (0.2 GAL. PER S.Y.)

TYPICAL ALLEY SECTION

NO SCALE

NOTE:
WITHIN 10' OF A CONCRETE APPROACH OR SIDEWALK THE ASPHALT SHALL TRANSITION FROM AN INVERTED CROWN TO MATCH THE FLAT CONCRETE. THE CONTRACTOR SHALL CONFIRM THAT NO WATER PONDING WILL OCCUR.

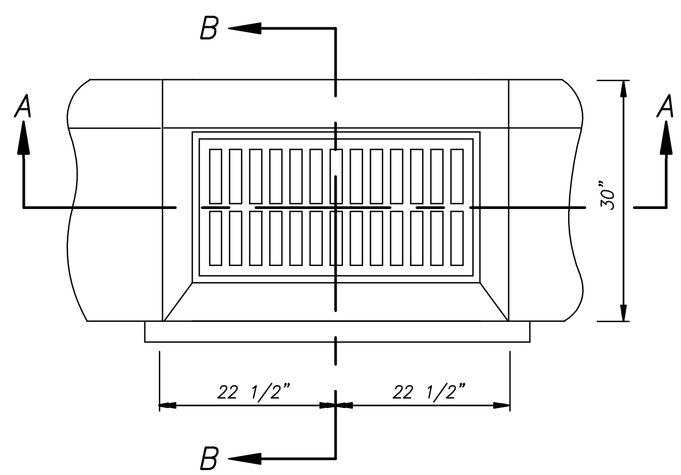

INLET –PLAN VIEW

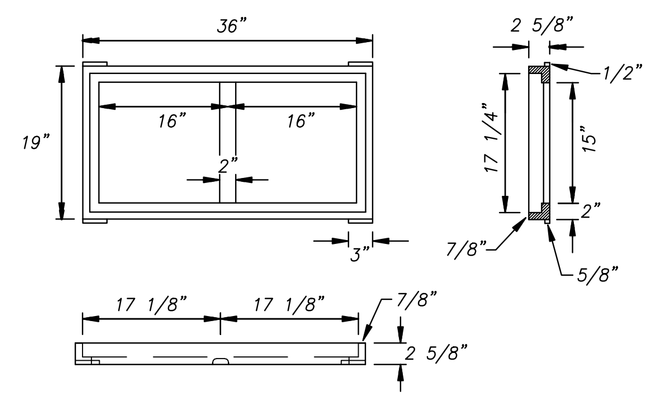

FRAME – PLAN VIEW & SECTIONS

GRATE SHALL BE NEENAH R-4641-F TYPE 'A' WITH FRAME, OR APPROVED EQUAL

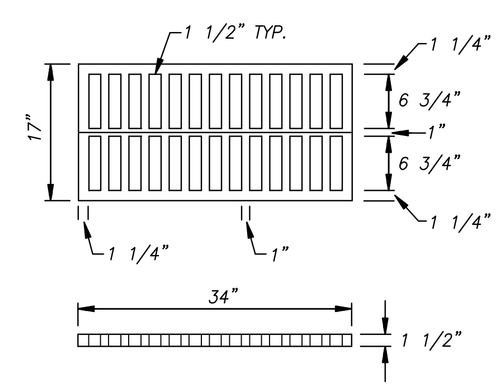

GRATE – PLAN VIEW & SECTION

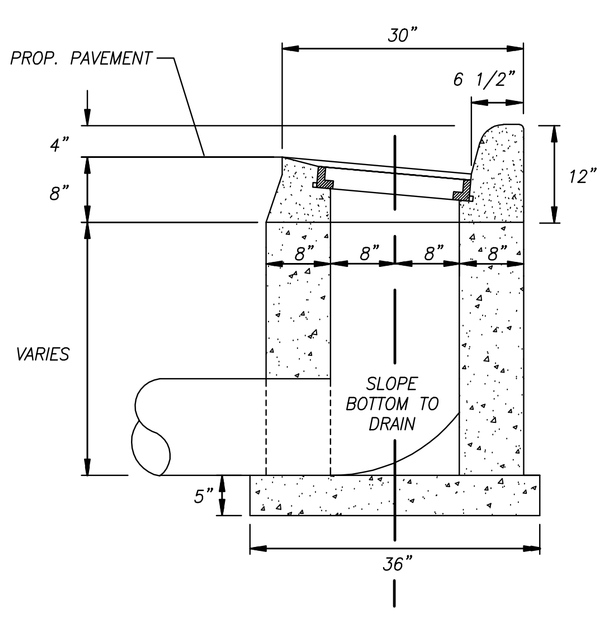

SECTION A–A

NOTES:

PRECAST CONCRETE SHALL MEET THE REQUIREMENTS OF O.D.O.T. 706.13

PIPE SHALL INTRUDE INTO CATCH BASIN A MAXIMUM OF 1", PIPE SHALL BE CUT PARALLEL TO CATCH BASIN, OPENING BETWEEN PIPE AND CATCH BASIN SHALL BE SEALED WITH NON-SHRINK GROUT.

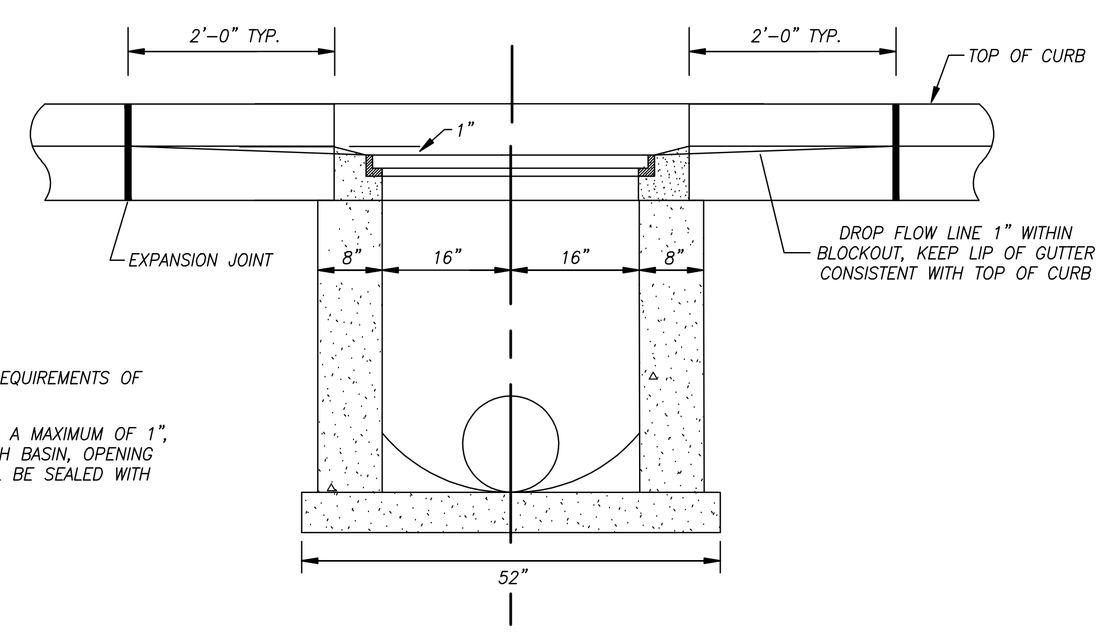

SECTION B–B

INLET, AS PER PLAN

NO SCALE

CONTRACTION JOINTS SHALL BE INSTALLED EVERY 10'
EXPANSION JOINTS SHALL BE INSTALLED WHERE MATCHING TO EXISTING

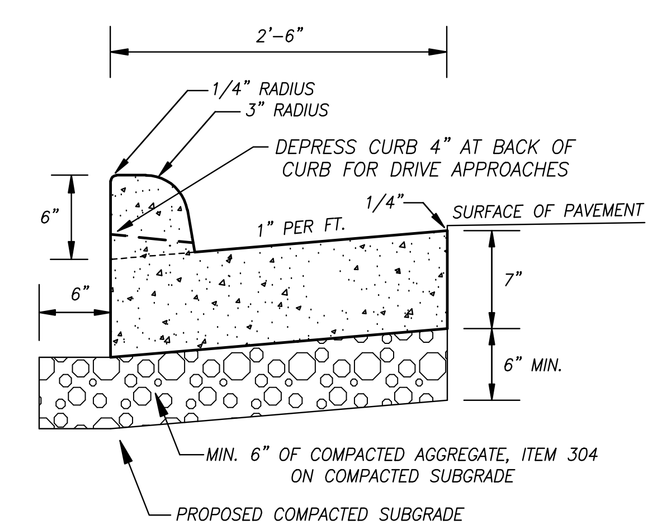

THE COST OF ALL LABOR, EQUIPMENT AND MATERIALS NECESSARY TO COMPACT THE SUBGRADE AND INSTALL THE COMPACTED AGGREGATE, SHALL BE INCLUDED IN THE UNIT PRICE BID FOR ITEM 609 "COMBINATION CURB AND GUTTER, AS PER PLAN"

COMBINATION CURB AND GUTTER, AS PER PLAN

NO SCALE

Mote & Associates, Inc.
ENGINEERING, LAND SURVEYING
214 WEST 4th STREET GREENVILLE, OHIO 45331
PHONE: (937) 548-7511 FAX: (937) 548-7484
E-MAIL: info@moteassociates.com WEBSITE: www.moteassociates.com

TYPICAL SECTIONS AND DETAILS
THE VILLAGE OF NEW BREMEN
NEW BREMEN OHIO

REVISIONS:

DATE: 8-3-09
DRAWN: T.J.B.
CHECKED: J.L.M.

JOB NO. NB12080707
DRAWING NO. 1D10878-R1